Architectural Thinking for Security

JAGOWA Consultants

Group 7
Consultants:

- AmirAli
- Alex
- Onur
- Winnie
- Jasmin

Business Context

- **Crested Eagle Finance,** a UK financial services company, are looking to integrate a new CRM system for their sales partners.
- This project was started **before** the **CISO joined** the company and little to no thought has been put into the design of the security of both the **application** and the **infrastructure**.
- The company are going to be starting a **pilot soon** with their business partners, therefore, there is a **quick turnaround** for the completion of this project.
- We, **JAGOWA**, have been **hired** as security **consultants** to create the **security architecture** for this project.

IT Context

- Part of the requirements for the CRM system is the **inclusion of an AI chatbot service** to provide support for sales partners.
- However, as the providers of this service have **not given any instructions on how to securely implement their product**, the onus is on us to figure out how to do so.
- Our approach to the security of this integration is to **focus on protecting data** at the core of the business and **document the rationale** for choosing specific security controls.

Architectural Decisions

- Determine the **key players & components** related to the system and their relationship to each other.
- Create architectural models showing the **structure and security of our implementation** at the **component and cloud levels**.
- Analyse the **potential risks** related to our solution as well as what to do in the event of an occurrence.
- The rest of this presentation is dedicated to detailing the full context of our solution architecture.

Process Flow

Alex Markou

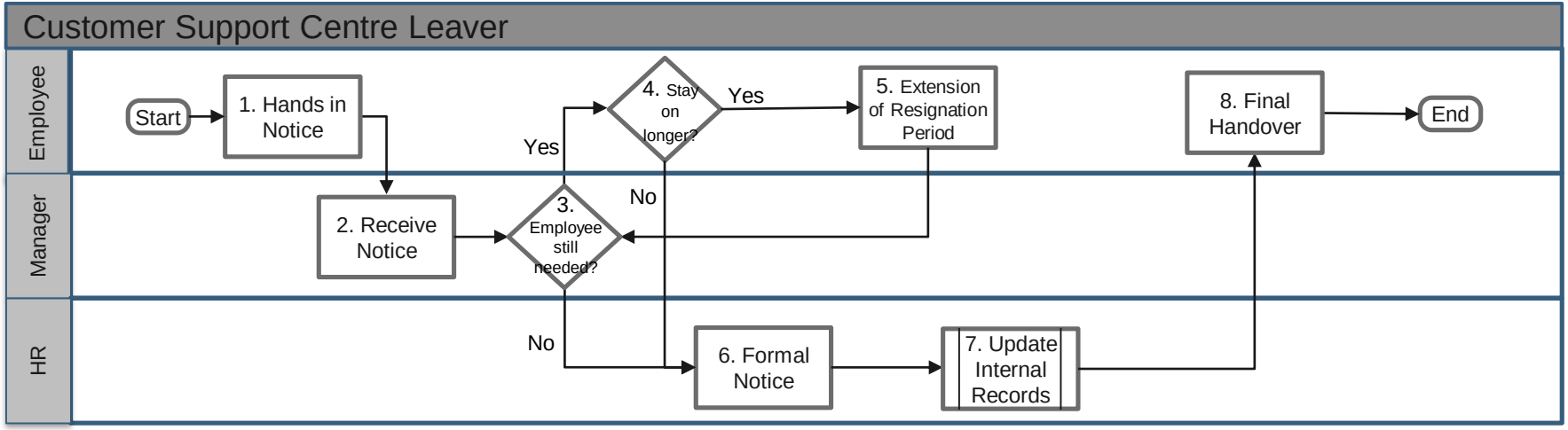

Note: While the content in this diagram does not directly relate to our topic, the model shown is applied to it.

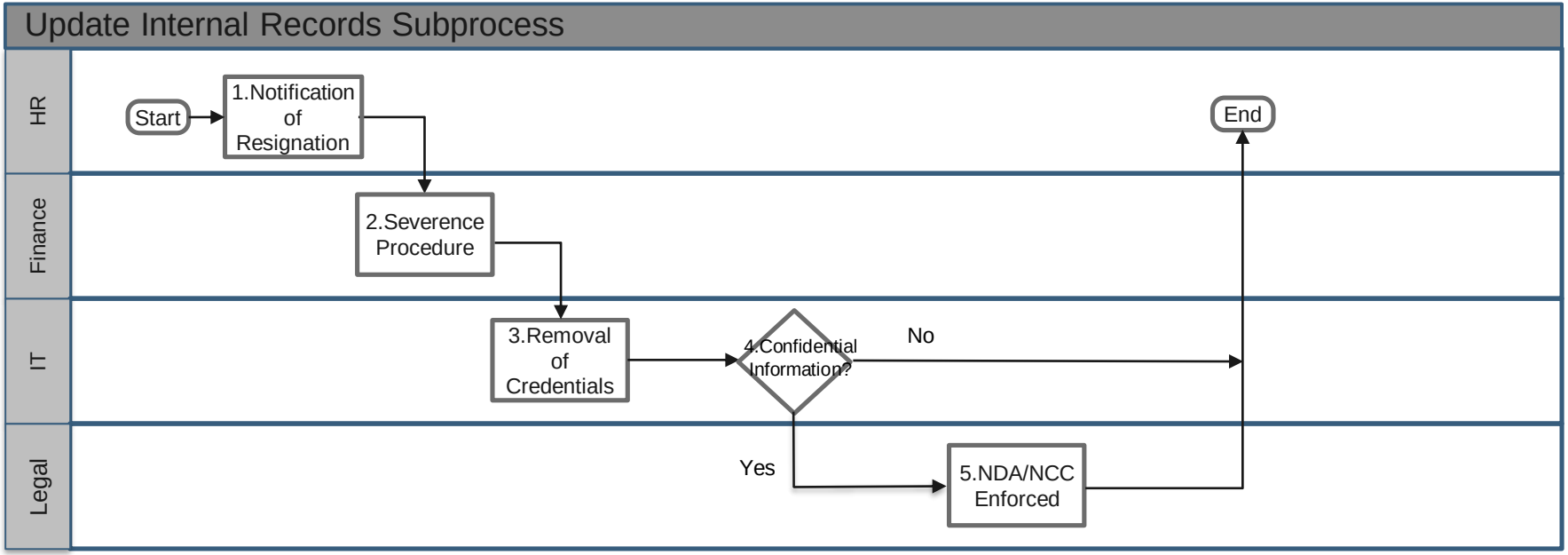
Update Internal Records Subprocess
HR
Finance
IT
Legal
Start
1.Notification of Resignation
2.Severence Procedure
3.Removal of Credentials
4.Confidential Information?
No
Yes
5.NDA/NCC Enforced
End

Alex Markou

Customer Support Centre Leaver Process Details

Step	Actor	Title	Description
1	Employee	Hands in notice	Employee hands in notice to their manager detailing that they would like to resign from their position
2	Manager	Receive notice	Manager receives notice of resignation from employee and reads it over
3	Manager	Employee still needed?	Manager reads over the notice of resignation and makes the decision to see if the employee is still needed in the company
3.1	Manager	Employee still needed? (Y)	If the manager still needs the employee to work for them, they will go on to ask employee if they are willing to stay on longer and extend their resignation period
3.2	Manager	Employee still needed?(N)	If the manager no longer needs the employee, HR will be notified with the employee's formal notice of resignation
4	Employee	Extend resignation	The employee will think over whether they would like to extend their resignation period and notify their manager of their decision

Customer Support Centre Leaver Process Details

Step	Actor	Title	Description
4.1	Employee	Extend resignation (N)	If the employee decides they do not want to extend their resignation period, HR will be given a formal notice
4.2	Employee	Extend resignation (Y)	If the employee decides to stay longer and extend their resignation period, their resignation period will be extended
5	Employee	Resignation extended	The employee's resignation period is extended for an agreed upon time. After this period has ended, the manager will consider if the employee is still needed at the company
6	HR	Formal notice	HR will receive a formal notice of the employee's resignation then update their records
7	HR	Update internal records	After receiving the notice, HR will update their internal records. This process would include notifying the security team to revoke user access, notifying finance for a compensation settlement and etc.
8	Employee	Final handover	Once everything has been processed and updated, the employee will hand over any of their property back to the company (company laptop, id badge, etc.) and any remaining documentation/work

Update Internal Records Subprocess Details

Step	Actor	Title	Description
1	HR	Notice of resignation	When the employee hands in their resignation to HR, HR then starts their process to update their internal records
2	Finance	Severance procedure	The Finance department will receive a notice from HR about the employee resignation and begin their off-boarding process (verify employee's final pay date and calculate outstanding salary)
3	IT	Removal of credentials	After Finance calculates the resigned employee's severance pay, IT will remove the employee's credentials from the system (access to internal systems, wipe devices, revoke MFA, etc.)
4.1	IT	Confidential information (Y)	If the employee deals with highly classified information, IT will flag their account and inform the Legal team of the data exposure risk
4.1	IT	Confidential information (N)	If the employee does not have access to highly classified information, they will complete their regular routine of account deactivation and update their records to show the users account was fully removed
5	Legal	NDA/NCC enforced	The Legal department will be notified by IT that the user had access to confidential company information and will issue/reaffirm an NDA/NCC with the employee

System Context

System Context Diagram

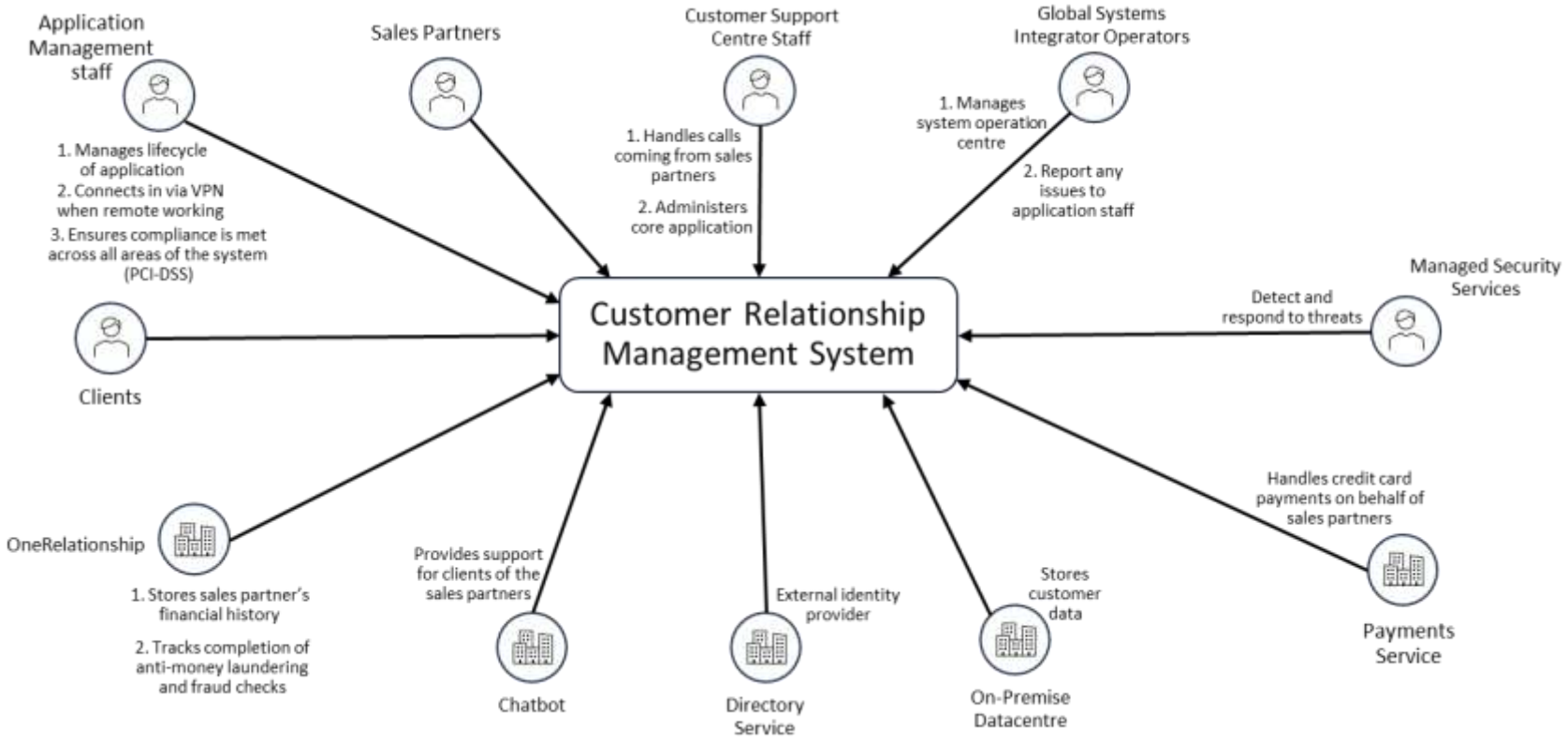

Onur Özkara

Actor / Use Case / Interface

Actors	Description	Interface
Application Management staff	Staff that manage the lifecycle of application and ensure compliance is met across all areas of the system. While remote working the connect via VPN.	Admin console VPN
Clients	End customers of the sales partners.	Chatbot
One Relationship Saas	A software application managing financial history and tracking completion of anti-money laundering and fraud checks	CRM API
Fintech Saas Chatbot	An AI chatbot that provides support for clients	Chatbot API connection
Directory Service	An identity provider for the application	Login and Authentication Service
On Premise Data Centre	A data centre that stored the customers data	VPN gateway
Payment Service	Service that handles credit card payments on behalf of sales partners	Payment gateway
Managed Security Service	Provider who monitors, detects and responds to security threat.	SIEM and Log forwarder
Global Systems Integrator Operators	They manage the system Operation Centre and report any issues to application staff.	Operations management control pane
Customer Support Centre Staff	Call-centre staff who handle calls from sales partners and administer the core application.	Support portal
Sales Partners	Business partners who use the open SaaS to manage financial history	Web portal

Actor / Use Case / Data Mapping

Actors	Use Case	Data Type Processed
Application Management staff	Manage lifecycle application and ensure compliance is met across all areas of the system. Connect to VPN when remote working.	Staff identity data. System configuration data.
Clients	Interact and receive support from the chatbot	Chat messages
One Relationship Saas	Store sales partner financial history and track completion of the anti-money laundering and fraud checks	Sales partners financial history. Fraud verification data
Fintech Saas Chatbot	Provide support for the clients of sales partners	Chats and support information
Directory Service	External identity provider	User identity data
On Premise Data Centre	Store customer data	Customer data
Payment Service	Handle credit card payments on behalf of sales partners	Payment card details
Managed Security Service	Detect and respond to threats	Security alerts and any threats data, Firewall logs
Global Systems Integrator Operators	Manage system operation center and report issues to application staff	System operational data
Customer Support Centre Staff	Handle calls coming from partners and administer core application.	Client query details
Sales Partners	Manage financial history of the sales partners	Sales partners financial history

Onur Özkara

Data Classification Scheme

Confidentiality

Data Classification	Description
Public	Information that is available to the public and is intended for open disclosure. If this information was released or lost, this would cause no harm to the organization or clients. E.G. FAQs, public website
Internal	Business data used internally by employees or partners which has limited sensitivity. Disclosure of this information could cause minor reputational/operational harm to the organization E.g. Project management records, internal documentation
Confidential	Information that is restricted to authorized people only. Disclosure could cause financial, legal, and or reputational damage to the organization. E.G. Application source code, architecture documentation, non-public contracts
Highly Confidential	Information that is critical and disclosure could lead to severe financial loss, possible regulatory penalties (legal), and or reputational damage. E.G. Customer financial details, PII, sales partner financial history, fraud check results

Data Classification Scheme

Integrity

Data Classification	Description
Low Risk	Data that if modified would have a minimal impact on the organization. E.G.
Moderate Risk	Business data that if its integrity was compromised it would have a moderate impact. E.G. Application log files, metrics of internal projects
High Risk	Data that if compromised would have a significant impact on the business as this data must be accurate and consistent. E.G. customer data, transaction history, payment gateway records
Critical Risk	Data that if compromised would have a critical impact on the organization. E.G. Financial transaction records, audit logs, compliance reports to regulators

Data Classification Scheme

Availability

Data Classification	Description
Category A	Business processes that have a critical impact on the organization if unavailable as it would halt business operations. E.G. Payment gateway, customer database, identity provider
Category B	Business processes that have a high impact on the operation if unavailable as they are core application components. E.G. API gateway, CRM application, customer support system
Category C	Business processes that have a moderate impact on the organization as they are services that support operations. E.G. CRM test environments, employee remote access, developer tools
Category D	Business processes that if unavailable would cause minimal disruption to the company. E.G. Chatbot service

Asset Inventory

Data Type	Data Fields	Data Classification	Legal and Regulatory
Identification and Authentication	Username	Confidential	PI
Identification and Authentication	Password	Highly Confidential	PI
Payment Details	Card Name	Confidential	PI & PCI DSS
Payment Details	Card Number	Confidential	PCI DSS
Payment Details	Expiry Date	Confidential	PCI DSS
Payment Transaction	Payment Log Event	Confidential	PCI DSS

Component Architecture

Jasmin Williams

Component Architecture Diagram

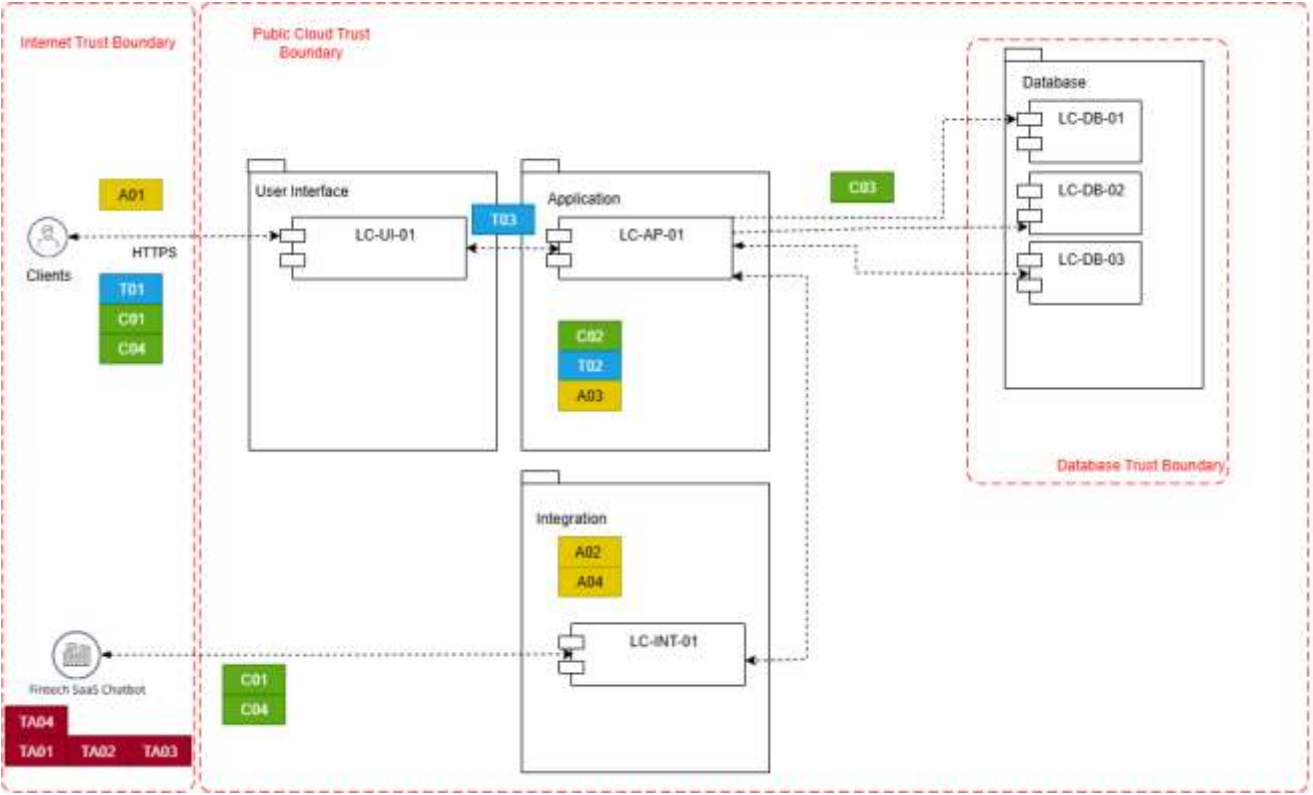

Assets	Threats	Threat Actors	Controls
A01 - Customer financial data	T01 - DDoS / API abuse	TA01- External unauthorised	C01 – API Gateway with rate limiting
A02 - Chatbot logs	T02 – Misconfigured container security	TA02 - External authorised	C02 – Container image signing
A03 - Container images	T03 – Injection attacks	TA03 - Internal unauthorised	C03– Database query sanitization & ORM enforcement
A04 - Messaging & transaction logs		TA04- Automated botnet	C04 – Web Application Firewall for chatbot UI/API

List
LC-DB-02 - Redis
LC-DB-01 - MySQL
LC-DB-03 - MongoDB
LC-AP-01 - Core Application Server (OpenShift Container)
LC-UI-01 - Sales Partner Portal
LC-INT-01 - Chatbot API

Threat Risk

Threat Target	Attack Technique	Threat Actor	STRIDE	Inherent Risk			Risk Mitigation			Residual Risk		
				Likelihood	Impact	Overall Risk	Preventive	Detective	Corrective	Likelihood	Impact	Overall Risk
User Data (Chat logs, inputs)	Data exfiltration via insecure API	External Unauthorised	I	M	H	H	Encrypt data in transit and at rest, enable strict RBAC & MFA	Monitor access logs for anomalies, set automated alerts for large data exports	Revoke compromised tokens, notify affected users, patch exploited components	M	L	L
System Availability	DDoS / API Abuse	Automated Botnet	D	H	H	H	Deploy rate limiting & throttling, use WAF & CDN protection	Monitor traffic volume & latency, automated anomaly alerts	Activate backup servers, block offending IP ranges	M	M	M
MongoDB/Redis databases	NO-SQL injection attacks	External Unauthorised	T.I	H	H	H	Query sanitization, ORM enforcement, Redis ACLs	Monitor DB access logs, IDS/IPS	Restore from backup, patch injection vendor	L	M	L
Chatbot response injection	Prompt injection leading to leakage of sensitive customer data	External Unauthorised	I	M	M	M	Data masking before sending to chatbot, strict PII redaction	Chatbot output monitoring, DLP alerts	Block session, purge logs. Update sanitisation rules	L	L	L

Cloud Architecture

AmirAli Taherdoust

Cloud Architecture Diagram

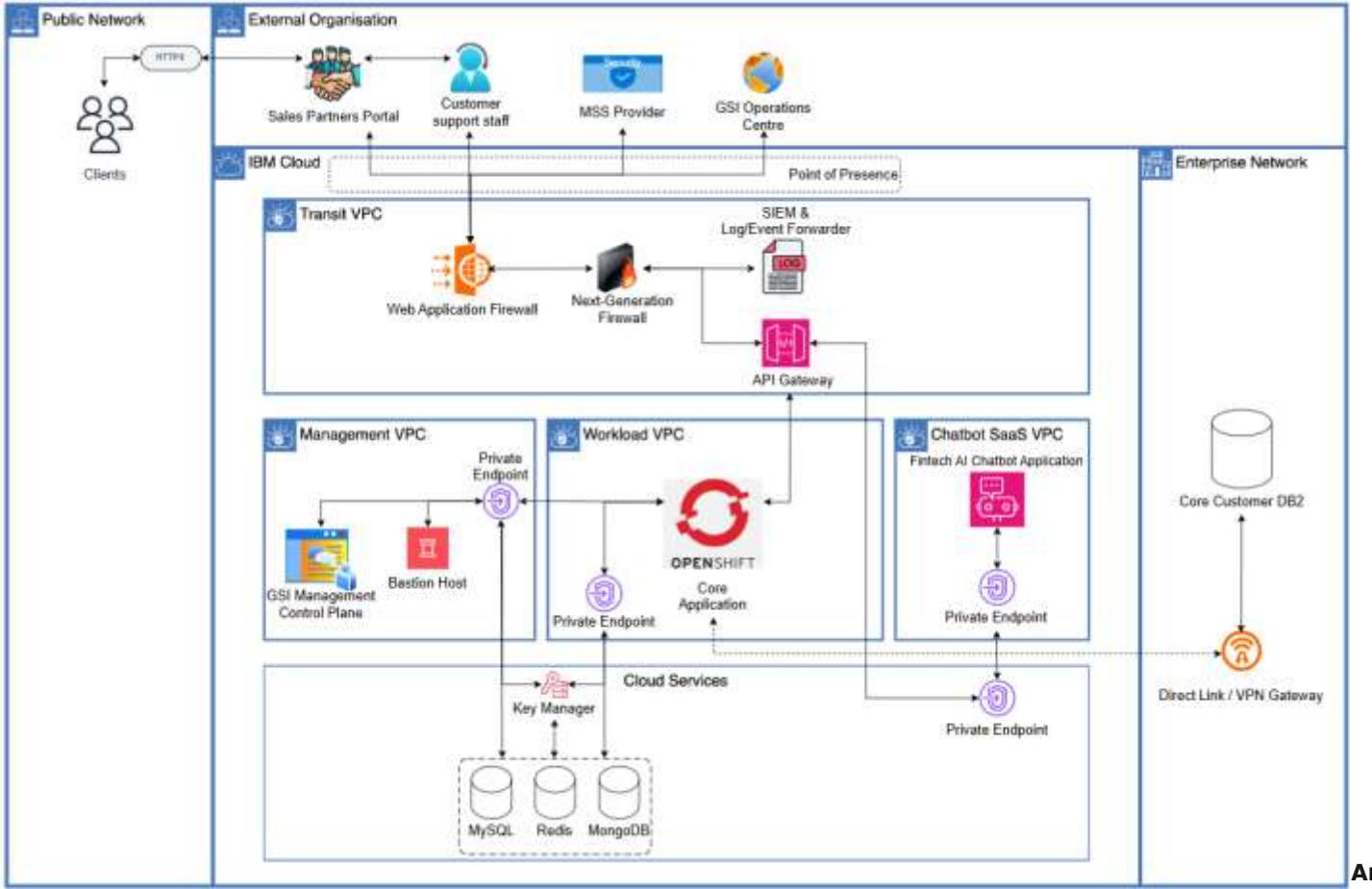

AmirAli Taherdoust

Security Architectural Decision Record

Decisions	Motivation (or Rationale)	Implication
Two firewalls provided by MSS	Next-generation firewall implemented to monitor and control network traffic to the application / chatbot (sales partners, clients, customer support centre) Additional firewall WAF is implemented to detect and prevent attacks from the web MSS subcontracted for threat management which allows for 24x7 operations	All traffic related to external organisations go through the firewalls (both incoming and outgoing)
Log / Event Forwarder	Collects logs from the whole system allowing for secure monitoring Logs and events forwarded to management services (GSI and MSS)	Each application must generate logs that are sent to external management services according to a specific schedule.
Endpoints for VPCS	• Private endpoints for each VPC provides an extra layer of internal security • Allows for secure internal communication between cloud services • Minimises exposure of internal traffic	Private endpoints are defined per VPC/service. The application uses these endpoints for private connectivity (no direct public access).

Architecture Decision Record

Subject Area	Network Security	**Topic**	Firewall Configuration
Architectural Decision	Should we implement two firewalls; one to prevent web-based attacks and another to monitor and control network traffic?	**AD 01**	FW-AD-0101
Issue or Problem	The Saas Chatbot is being accessed by external users exposing it to potential web attacks and network traffic		
Assumptions	1. The cloud can support deployment of two separate firewalls 2. The MSS has capability to monitor, detect and respond to alerts of threats 24/7.		
Motivation	Provide continuous monitoring and layered protection.		
Alternatives	1. Implement one firewall for both attack prevention and traffic monitoring. 2. Use a cloud-native firewall managed internally instead of MSS.		
Decision	Implement two MSS managed firewalls including NextGen and web application Firewall to prevent attacks and monitor network traffic.		
Justification	The MSS already provides threat detection and response services, so extending their scope to include firewall management ensures consistent 24/7 monitoring, layered protection. and faster incident handling.		
Implications	1. All traffic, including incoming and outgoing, must pass through the appropriate firewalls, with filtering enforced. 2. Firewall logs must be forwarded to the MSS.		
Derived requirements	1. Integrate firewall logging with the MSS system. 2. Regular testing of firewalls, including WAF evaluation.		
Related Decisions	1. Log/Event Forwarder to send logs to MSS. 2. VPC Endpoints for secure private connections.		

Threat Detection & Incident Response

Winnie Wanjiku Githua

RAID Log

Statement	Action(s)	Owner & Date
R. There is a risk that the project has insufficient resources (load balancing, sufficient budget, employees) allocated to it, caused as a result of an increase to initial scope which may result in failure to the deliver the project or an increase to the project deadline/cost.	Confirm the amount of project resources allocated considers a potential increase in scope.	Project Resourcing + Before Project Start Date
A. There is an assumption that the chatbot product will come out of the box in a preconfigured state that will allow changes to be made to it. If assumption is not validated or turns out to be invalid there is a risk that there could be a difficulty integrating the chatbot SaaS within the CRM system which may result in needing to switch providers to a more amenable one, potentially resulting in a delay of the project deliverable.	Verify with the chatbot providers that their products are in fact configurable in the required way.	Service Integrator + One month from start of project
I. There is an issue that a lead developer on the project has taken an unplanned leave which has resulted in a reduction of development speed. This has been caused because the organisation of the development team in no longer being managed so misalignments are occurring more frequently, linking to **R2** in the risk table (appendix).	Confirm and assist with the wellbeing of the employee in question to ensure a swift return to work. Review redundancy plans to ensure a lack of key personnel is reduced for future projects.	Project Manager/Human Resources + Until Employee can Return
D. There is a dependency on the chatbot provider to have 24/7 availability of their service within a month of the project start date. If not delivered against and/or in required timeframe there is a risk that there could be issues implementing and testing the integration which may result in a delay of the final project deliverable.	Confirm with the chatbot provider that they can meet this requirement within the project timeline.	Project Manager + One Month from Project Start Date

Threat Detection Use Case

Threat detection use case: Monitor Access Logs for Anomalies						
Description	**Detect any anomalies that appear in the access logs indicating unauthorized use, account compromise, or data scraping attempts.**					
Rationale	**When looking at the access logs, the presence of an unauthorised user accessing our system could signify our system is compromised. Unauthorised access is a significant security threat as an attacker could perform actions outside of regular user permissions, access or misuse resources, or attempt to escalate privileges. This could result in operational disruptions, financial loss, and reputational damage.**					
Requester	**Security Architect**					
Rule	**Description**	**Event sources**	**Event fields**	**Exceptions**	**Dimensions**	**Notes**
Sensitive Data Access Anomaly	Detect unusual access patterns to sensitive endpoints (e.g., querying 10 different Customer Profiles in under 1 minute).	Core Application Logs, Database Logs	Query Type, Resource ID Accessed, User ID	If automated batch processing jobs are run at scheduled times.	Customer Data and Payment Data	Rapid and sequential access to different customer records indicates that “data Scraping” or “mass data leakage” is occurring.
High volume and speed of API requests	Detect a sudden increase in API requests from the chatbot that exceed a set threshold.	API Gateway Access Logs, WAF Logs	Source IP, Timestamp, Request Count, User Context (JWT)	None, because volume limits should apply to all sessions to prevent DoS or scraping.	Chatbot SaaS VPC Interface	A sudden increase in traffic usually indicates that a script/bot is driving the chatbot, not a human.
High IP Cardinality for Single User	Detect when a single JWT (identified by Client_ID or Token_ID) is associated with multiple distinct Source_IP addresses within a short time window (e.g., > 3 IPs in 5 mins).	API Gateway Access Logs	Client_ID, Source_IP, Token_ID, Timestamp	Dynamic network changes rarely cause a large number of IPs to change rapidly in a short period of time, and the rate is less and slower than the alert threshold.	Chatbot API Gateway	Seeing multiple distinct IPs for one token strongly suggests the token has been leaked and is being used by a botnet or multiple attackers.

Winnie Wanjiku Githua

Incident Response Runbook

Incident response runbook: Access logs anomalies response						
Description		**Respond to anomalies in the access logs (SaaS AI Chatbot).**				
Detection Use Case		**Access logs anomalies detection**				
	Activity	**Description**	**Tier 1**	**Tier 2**	**Tier 3**	**Tier 4**
Identification	1.	1. Check the alert and note the time, system and severity. 2. Collect scheduled reports from API Gateway/WAF and partner portal around the alert window. 3. Check if there was any scheduled disruptions such as tests that might have caused the anomaly	✓			
	2.	1. Link activity to the user and check if there is a difference compared to the normal pattern and check how much impact it can cause. 2. Check that the token is valid and not expired, look for unlikely jumps in user location, and make sure traffic is using private links and any unwanted attempts are blocked.		✓		
Containment	1.	1. Save evidences of all relevant logs and also tighten WAF rules on chatbot routes 2. Enable and tune the rate-limit on the API Gateway 3. Block suspicious IP addresses linked and sources		✓		
	2.	1.Revoke the suspicious tokens, sessions or API keys. 2.Authentication of affected user accounts.		✓		
Eradication	1.	1. Investigate the root cause and how the incident occurred. 2. Restrict and eliminate the unauthorized access used in the incident. 3. Identify the pattern used to gain unauthorized access to the system.		✓		
	2.	1. Approve long term fixes to ensure the weakness is removed. 2. Apply changes such as configuration updates. 3. Check that they have been completed.			✓	
Recovery	1.	1. Remove the temporary limits. 2. Verify that the chatbot is working normally; continue monitoring.		✓		
	2.	1. Notify service providers (partners, MSS, carriers) that normal service has returned to normal. 2. Coordinate legal notices, if necessary, and officially declare the incident closed.			✓	
Post-Incident Review	1.	1. Review incident records. 2. Record the updates improvements on the detection rules.				✓

Winnie Wanjiku Githua

Appendix

Risks

Statement	Action(s)	Owner & Date
R1. There is a risk that the project client requires the use of a specific chatbot SaaS provider potentially resulting in delays on the final project deliverable if found to be incompatible. This can be caused by a pre-existing agreement with the project client and the provider to use their service.	Confirm with project client if there is a specific chatbot provider to be used and that delays are acceptable.	Project Manager + One Month from Project Start Date
R2. There is a risk that the project has insufficient resources (load balancing, sufficient budget, employees) allocated to it, caused as a result of an increase to initial scope which may result in failure to the deliver the project or an increase to the project deadline/cost.	Confirm the amount of project resources allocated considers a potential increase in scope.	Project Resourcing + Before Project Start Date
R3. There is a risk that the integrated chatbot goes down suddenly, caused as a result of a service failure on the part of the provider which may result in work disruptions and a need for increased redundancy in the system.	Confirm chatbot provider has operational agreements related to service failures in place. Confirm internal contingencies exist should there be a service failure.	Project Manager + Before Project Start Date
R4. There is a risk that the chatbot service could be misused, caused as a result of users inputting invalid/irrelevant sensitive data which may result in complications due to handling and ingesting of data outside of the scope of compliance.	Confirm chatbot provider has data obfuscation/scrubbing as part of its infrastructure. Confirm integration solution does input validation and sanitisation.	Service Integrator + One Month from Project Start Date

Assumptions

Statement	Action(s)	Owner & Date
A1. There is an assumption that the chatbot product will come out of the box in a preconfigured state that will allow changes to be made to it. If assumption is not validated or turns out to be invalid there is a risk that t*here could be a difficulty integrating the chatbot SaaS within the CRM system which may result in needing to switch providers to a more amenable one, potentially resulting in a delay of the project deliverable.*	Verify with the chatbot providers that their products are in fact configurable in the required way.	Service Integrator + One month from start of project
A2. There is an assumption that software licences and copyrights are considered by the development team. If assumption is not validated or turns out to be invalid there is a risk that resulting software product may infringe upon third-party intellectual property (IP) rights which may result in significant legal actions and financial penalties.	Establish a clear licensing policy and provide developer training	Service Integrator + Before Project Start Date
A3. There is an assumption that the solution will be developed with flexibility in mind, allowing for swift exchanging of integrated components. If assumption is not validated or turns out to be invalid there is a risk that in the event of a failure the whole solution will be affected rather than just a single part of it which may result in significant cost and service issues.	Review existing development guidelines to ensure that flexibility is a core practice internally.	Project Manager + Before Project Start Date
A4. There is an assumption that as the solution is being developed, security services are also being integrated in parallel. If assumption is not validated or turns out to be invalid there is a risk that there could be vulnerabilities in the deployment which may result in significant security breaches and associated costs.	Review existing development guidelines to ensure that security is a core practice internally.	Project Manager + Before Project Start Date

Issues

Statement	Action(s)	Owner & Date
I1. There is an issue that the chatbot provider has taken the service offline for extended maintenance which has resulted in a halt to the testing of the integration. This has been caused because a critical vulnerability in their service was discovered, linking to **R3** in the risk table.	Confirm with the provider that the vulnerability only affect their service. Revisit existing agreements guaranteeing minimum quality of the service, linking to **D4** in the dependency table.	Project Manager + <Recovery Time>
I2. There is an issue that a lead developer on the project has taken an unplanned leave which has resulted in a reduction of development speed. This has been caused because the organisation of the development team in no longer being managed so misalignments are occurring more frequently, linking to **R2** in the risk table.	Confirm and assist with the wellbeing of the employee in question to ensure a swift return to work. Review redundancy plans to ensure a lack of key personnel is reduced for future projects.	Project Manager/Human Resources + Until Employee can Return
I3. There is an issue that the chatbot service is incompatible with the core customer database which has resulted in delays to the final project deliverable. This has been caused because it has been found that the chatbot cannot adequately utilise this resource, linking to **R1** in the risk table.	Revisit existing agreements guaranteeing minimum quality of the service, linking to **D4** in the dependency table.	Project Manager
I4. There is an issue that the current development pace does not align with project timeline which has resulted in evident delays to the final project deliverable. This has been caused because of several issues raised regarding the capabilities of the chatbot service and its provider.	Convene with client about delays and the parties at fault regarding them. Revisit any existing agreements regarding allowance for delays, linking to **R1** in the risk table.	Project Manager/Compliance Team

Dependencies

Statement	Action(s)	Owner & Date
D1. There is a dependency on the chatbot provider to deliver their service within a month of the project start date. If not delivered against and/or in required timeframe there is a risk that *there could be a difficulty integrating the chatbot within the CRM system* which may result in *a delay of the final project deliverable.*	Confirm that the provider has agreed to project timeline and the scope of the services they will deliver.	Project Manager + One month from start of project
D2. *There is a dependency on the* chatbot provider to deliver their service in a workable state at the beginning of the project. If not delivered against/or in the required timeframe there is a risk that a different provider must be used which may result in significant delays of the final project deliverable.	Consider multiple chatbot providers to best select the product that best meets the project's needs. Confirm with chatbot provider that their service can be configured to suit the needs of the project.	Project Manager + Project Start Date
D3. There is a dependency on the chatbot provider to have 24/7 availability of their service within a month of the project start date. If not delivered against and/or in required timeframe there is a risk that there could be issues implementing and testing the integration which may result in a delay of the final project deliverable.	Confirm with the chatbot provider that they can meet this requirement within the project timeline.	Project Manager + One Month from Project Start Date
D4. There is a dependency on the chatbot provider to deliver a functional service (no hallucinations/data leakage/etc) by the beginning of the project. If not delivered against and/or in required timeframe there is a risk that there could be issues implementing and testing the implementation which may result in a delay of the final project deliverable.	Confirm with the chatbot provider that their service will meet the functional requirements and standards necessary for the project. Create/revisit agreements guaranteeing the minimum quality of the chatbot service.	Project Manager + Project Start Date

Team Contribution Record

Artefact	Create Slide	Unit Presentation	Update Slide	Final Presentation
Overall Business and IT Context	Alex, Jasmin, AmirAli	NONE	NONE	Alex
Process Flow	Alex, Jasmin	Alex, Jasmin	Alex, Jasmin	Alex
System Context	Onur	Winnie	Alex	Onur
Actor/Use Case/Data Mapping Matrix	Winnie	NONE	Winnie	Onur
Data Classification	Jasmin	NONE	NONE	Onur
Information Asset Inventory	Alex	NONE	NONE	Onur
Component Model with Threats	Amirali, Onur	NONE	AmirAli, Onur	Jasmin
Threat, Vulnerability and Risk Matrix	Onur	NONE	Onur	Jasmin
Cloud Deployment Model	AmirAli	NONE	AmirAli	AmirAli
Architectural Decisions	Winnie, Jasmin	NONE	Jasmin ,AmirAli	AmirAli
Viability Assessment (RAID)	Alex	Onur	NONE	Winnie
Threat Detection Use Case	AmirAli	NONE	AmirAli	Winnie
Incident Response Run Book	Winnie	NONE	AmirAli	Winnie

Thank you for your time and patience.